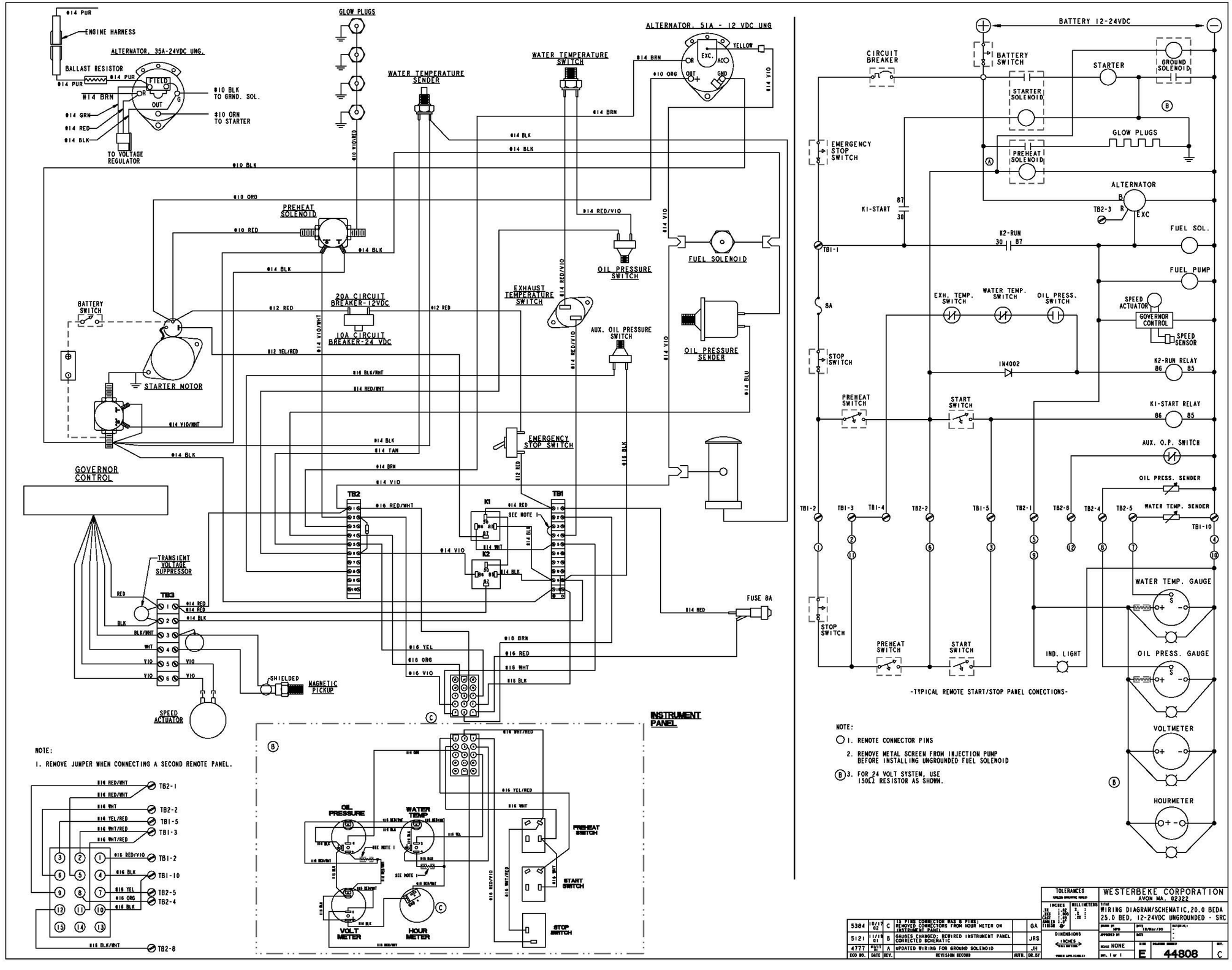

-TYPICAL REMOTE START/STOP PANEL CONECTIONS-

NOTE:

1. REMOVE JUMPER WHEN CONNECTING A SECOND REMOTE PANEL.

NOTE:

1. REMOTE CONNECTOR PINS
2. REMOVE METAL SCREEN FROM INJECTION PUMP BEFORE INSTALLING UNGROUNDED FUEL SOLENOID
3. (B) FOR 24 VOLT SYSTEM, USE 150Ω RESISTOR AS SHOWN.

ECO NO.	DATE	REV.	REVISION RECORD	AUTH.	DR. BY
5384	10/17 02	C	13 PINS CONNECTOR WAS 8 PINS; REMOVED CONNECTORS FROM HOUR METER ON INSTRUMENT PANEL		GA
5121	11/18 01	B	GAUGES CHANGED; REWIRED INSTRUMENT PANEL CORRECTED SCHEMATIC		JRS
4777	01/17 01	A	UPDATED WIRING FOR GROUND SOLENOID		JH

TOLERANCES (UNLESS OTHERWISE SPECIFIED)

INCHES: .XX ±.02, .XXX ±.005, .XXXX ±.0005, ANGLES ±.5°, FINISH ±

MILLIMETERS: .X ±.2, .XX ±.05, .XXX ±.02

DIMENSIONS: INCHES / MILLIMETERS (UNLESS OTHERWISE SPECIFIED)

WESTERBEKE CORPORATION
AVON MA. 02322

TITLE: WIRING DIAGRAM/SCHEMATIC, 20.0 BEDA 25.0 BED, 12-24VDC UNGROUNDED - SRC

DRAWN BY: SPB | DATE: 10/Mar/00 | MATERIAL: -

APPROVED BY: | DATE: | SCALE: NONE | SIZE: E | DRAWING NUMBER: 44808 | REV. C

SHT. 1 OF 1